SD8610,1,7,8
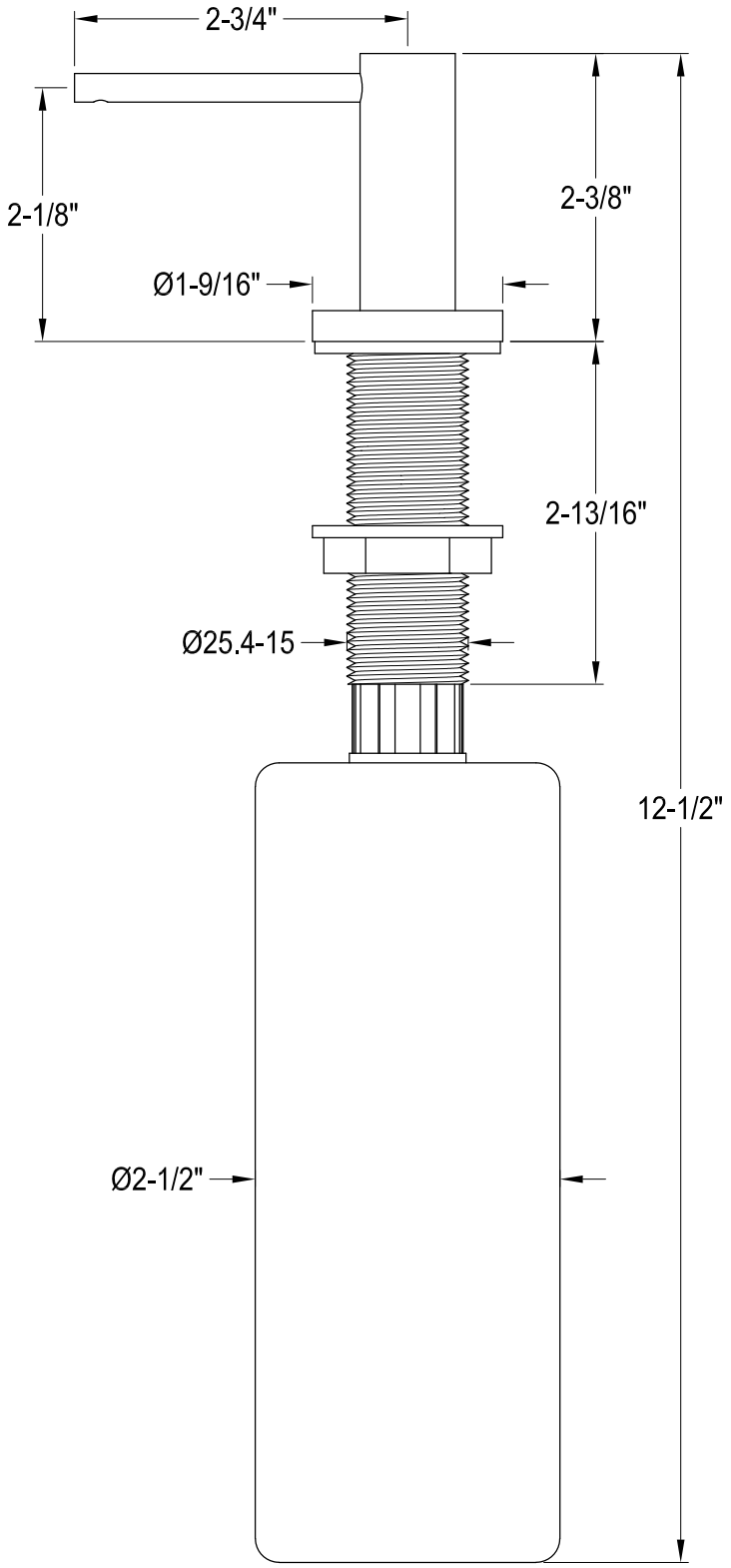
Soap Dispenser